H-GCF Gas Filter Housing

Low Pressure

Cobetter H-GCF Filter Housing designed air/gas filtration in biotechnology, chemical, electronic and food & beverage industries.

The housings are compatible with Cobetter]GPFL (PTFE membrane), GGFP (GF media), and Stainless Steel Filter Cartridges to meet the requirements for air/gas filtration.

Endcap design of the housing is Code7 (external 226 double o-ring with 2 locking tabs) which provides safe and secure sealing.

Design Features

- External 226 double o-ring with 2 locking tabs Endcap ensures safe and secure sealing.
- Housings flange connection designed in accordance with international standards.

Surface Finish

Polish Type	Mirror Polish; Internal Electro-polished
Surface Option	Internal Ra: 0.3μm; External Ra: 0.4μm

Operating Conditions

Max. Operating Pressure	0.6 Mpa (6 bar) / 1.0Mpa (10 bar)
Max. Operating Temperature	135°C（275°F) / Design Temperature: 140°C
Steam Sterilization	In-situ / Autoclave @ 121°C / 30 min

Material of Construction

Housing Body	304;316L
Vent / Drain	304;316L
Clamp	304
Leg	304
O-ring/Gaskets	Silicon, Viton, EPDM

Connection

Body Connection	Flange / Tri-clamp
Inlet / Outlet	Flange / Tri-clamp
Vent	_
Drain	G1/4"
Pressure Gauge	M14*1.5

Drawings & Dimensions

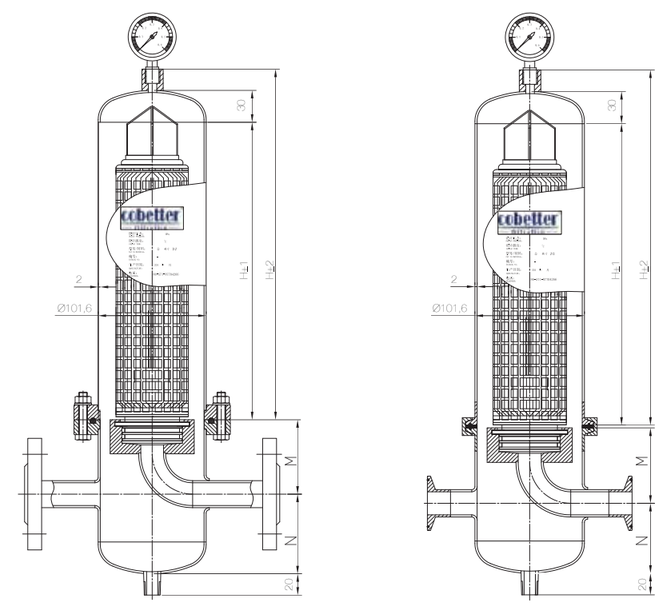

Drawings & Dimensions

	1 round			
	5"	10"	20"	30"
H	170	280	540	790
L	220	330	590 840	

Ordering Information

	Number of Filters	Filter Length	Material	End Cap	Housing Connection	Inlet / Outlet	Sealing Material	Design Pressure	Surface Finish
H-GCF	1	05	F	S	T	T38	S	X	A
	1 1 round	05 5 inch 10 10 inch 20 20 inch 30 30 inch	F 304 S 316L	S 226	T Tri-clamp F Flange	T25 Tri-clamp DN 25 T38 Tri-clamp DN 38 T50 Tri-clamp DN 50 F25 Flange DN 25	S Silicone E EPDM V Viton	X 0.6MPa Y 1.0MPa	A Mirror Polish B Internal Electro-polished

H-GCF II
Gas Filter Housing

Suitable for medium-pressure and high-pressure conditions

H-GCFII Gas Filter Housings are designed for medium-pressure and high-pressure conditions.

Each filter-housing component complies with GMP standards to ensure that the housing meets necessary requirements.

Design Features

- Each filter housing has been designed by the Design Institute and the drawings are marked with a red seal to ensure their validity
- Welded seams have been checked and tested using X-ray flow detector to ensure its security and safety
- The Quality and Technical Supervision Bureau will verify/confirm the filter housing after completion and provide the pressure vessel certificate
- All materials and components are equipped with a pressure vessel certificate which fully complies with pressure equipment standards
- Filter housings with more than three rounds will be provide with the pressure vessel certificate and serial number for easy traceability
- Filter housings are available with a polished finish to meet cleanliness requirements where necessary

(压力容器制造许可证)

Surface Finish

Polish Type	Mirror Polish; Sand Blasting
Surface Option	Internal Ra .04μm; External Ra 0.6μm

Material of Construction

Housing Body	304;316L
Vent / Drain	304;316L
Screws	304
Leg	304
O-ring/Gaskets	Silicon, Viton, EPDM

Operating Conditions

Max. Operating Pressure	According to Pressure Design
Max. Operating Temperature	150°C
Sterilization	In-situ / Autoclave @ 121°C / 30 min

Connection

Body Connection	Flange
Inlet / Outlet	Flange
Vent / Drain	Flange

Drawings & Dimensions

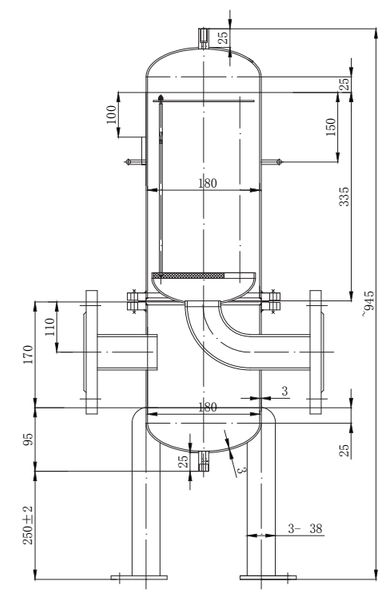

Pressure Vessel Standards

Working Pressure	⩾1.0MPa
Internal Diameter (non-circular cross-section refers to its maximum size)	⩾0.15m
Volume	⩾0.025m³
Work Pressure-Volume	⩾2.5MPa/L

The contained medium is gas/liquefied gas or liquid who's temperature is greater than its standard boiling point

Ordering Information

	Number of Filters	Filter Length	Material	End Cap	Housing Connection	Inlet / Outlet	Sealing Material	Design Pressure	Surface Finish
H-GCF Ⅱ	1	05	F	S	T	F50	S	Y	A
	1 1 round	05 5 inch 10 10 inch 20 20 inch 30 30 inch	F 304 S 316L	S 226	F Flange	F25 Flange DN 25 F50 Flange DN 50	S Silicone E EPDM V Viton	Y 1.0MPa	A Mirror Polish B Internal Electro-polished C Sand Blasted

H-VCF Vent Filter Housing

Air Filter Housing Especially for Use on Top of a Storage Tank

H-VCF Vent Filter Housing used in food & beverage and pharmaceutical applications to sterilize the air before it flows into the tank, while maintaining pressure balance inside and outside the housing.

All sanitary and GMP standards are met. The housing is easy to clean. Electro-polish surface finish is available upon request.

Surface Finish

Polish Type	Mirror Polish; Internal Electro-polished
Surface Option	Internal Ra: 0.3μm; External Ra: 0.4μm

Operating Conditions

Max. Operating Pressure	Ambient Temperature
Max. Operating Temperature	130 °C (266 °F)
Steam Sterilization	In-situ /Autoclave @ 121°C / 30 min

Material of Construction

Housing Body	304;316L
Clamp	304
O-ring / Gaskets	Silicon, Viton, EPDM, PTFE

Connection

Body Connection	Tri-clamp, Strengthened clamp
Outlet	1 inch (DN 25) clamp

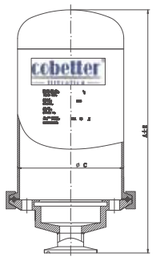

Drawings & Dimensions

	1 round 5 inch	1 round 10 inch	1 round 20 inch
A	232	262	622
C	102	102	102

Ordering Information

	Number of Filters	Filter Length	Material	End Cap	Housing Connection	Inlet / Outlet	Sealing Material	Design Pressure	Surface Finish
H-VCF	1	05	F	S	T	T25	S	O	A
	1 1 round	05 5 inch 10 10 inch 20 20 inch 30 30 inch	F 304 S 316L	S 226 T 222	T Tri-clamp	T25 Tri-clamp DN 25 T38 Tri-clamp DN 38 T50 Tri-clamp DN 50	S Silicone E EPDM V Viton	O Ambient Pressure	A Mirror Polish B Internal Electro-polished

▲ **H-VCF III**
No vent, with stainless steel cage cover

▶ **H-VCF II**
No vent, with tube elbow

H-VCF II In-line Vent Housing

Vent Filter Housing with Heated Jacket

H-VCF II Vent Filter Housing is superior vent filter housing with an anti-condensation function for air filtration and with stricter requirements.

It is composed of the following parts: vent, heated jacket, jacket protection layer, and constant electronic temperature system.

The advantages when compared to vent filter housings are:

- Filter cartridges are kept dry by heat which helps guarantee their flow rates.
- High temperature environment prevents germ growth.
- An advanced constant electronic temperature system.
- Elbow design prevents particles from flowing into the vent housing, thus protecting the filter housing from damage.

Additionally, H-VCF III Vent Housing meets the requirements for use in a clean room.The heated jacket is placed in a sealed column to keep dust and bacteria from flowing into the housing. This also makes the housing easy to clean.

Operating Conditions

Max. Operating Pressure	0.6Mpa (6bar)
Max. Operating Temperature	130 °C (266°F)
Steam Sterilization	In-situ / Autoclave @ 121°C / 30 min

Connection

Body Connection	Tri-clamp, Strengthened clamp
Outlet	1 inch (DN 25) clamp

Surface Finish

Polish Type	Mirror Polish; Internal Electro-polished
Surface Option	Internal Ra: 0.3μm; External Ra: 0.4μm

Material of Construction

Housing Body	304;316L
Clamp	304
O-ring / Gaskets	Silicon, Viton, EPDM, PTFE

Drawings & Dimensions

	1 round 5 inch	1 round 10 inch	1 round 20 inch
A	277	397	647
C	102	102	102

Ordering Information

	Number of Filters	Filter Length	Material	End Cap	Housing Connection	Inlet / Outlet	Sealing Material	Design Pressure	Surface Finish
H-VCF II H-VCF III	1	05	F	S	T	T25	S	X	A
	1 1 round	05 5 inch 10 10 inch	F 304 S 316L	S 226 T 222	T Tri-clamp	T25 Tri-clamp DN 25 T38 Tri-clamp DN 38 T50 Tri-clamp DN 50	S Silicone E EPDM V Viton	X 0.6MPa	A Mirror Polish B Internal Electro-polished